Komponenty Do Bram Sp. z o.o.
Adres: ul. Wycieczkowa 26, 91-518 Łódź
E-mail: biuro@kdb-polska.pl
Telefon: +48 509 337 899

ROLLER WITH BEARING 46/11/168- 35 KG
ARTICLE: 25011E

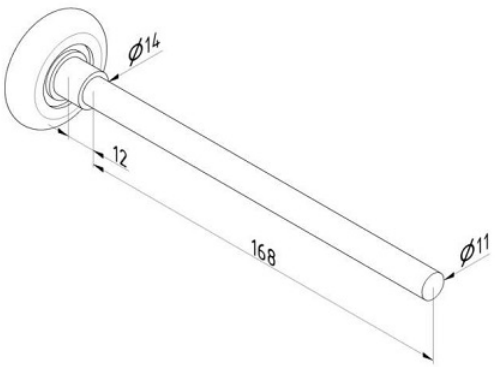

Factory price: **1.20 € (excl. VAT) / piece** **Price without VAT**

PRODUCT DESCRIPTION

Plastic roller with bearing
Material: Galvanised steel / plastic
Roller diameter: 46 mm
Roller axis diameter: Ø 11mm, L=168mm
Max Load: 35 kg at 750 000 revolutions

ADDITIONAL INFORMATION

Weight	0.2 kg
Shipping class	Standard